Modelo HP332D CORDLESS HAMMER DRIVER DRILL

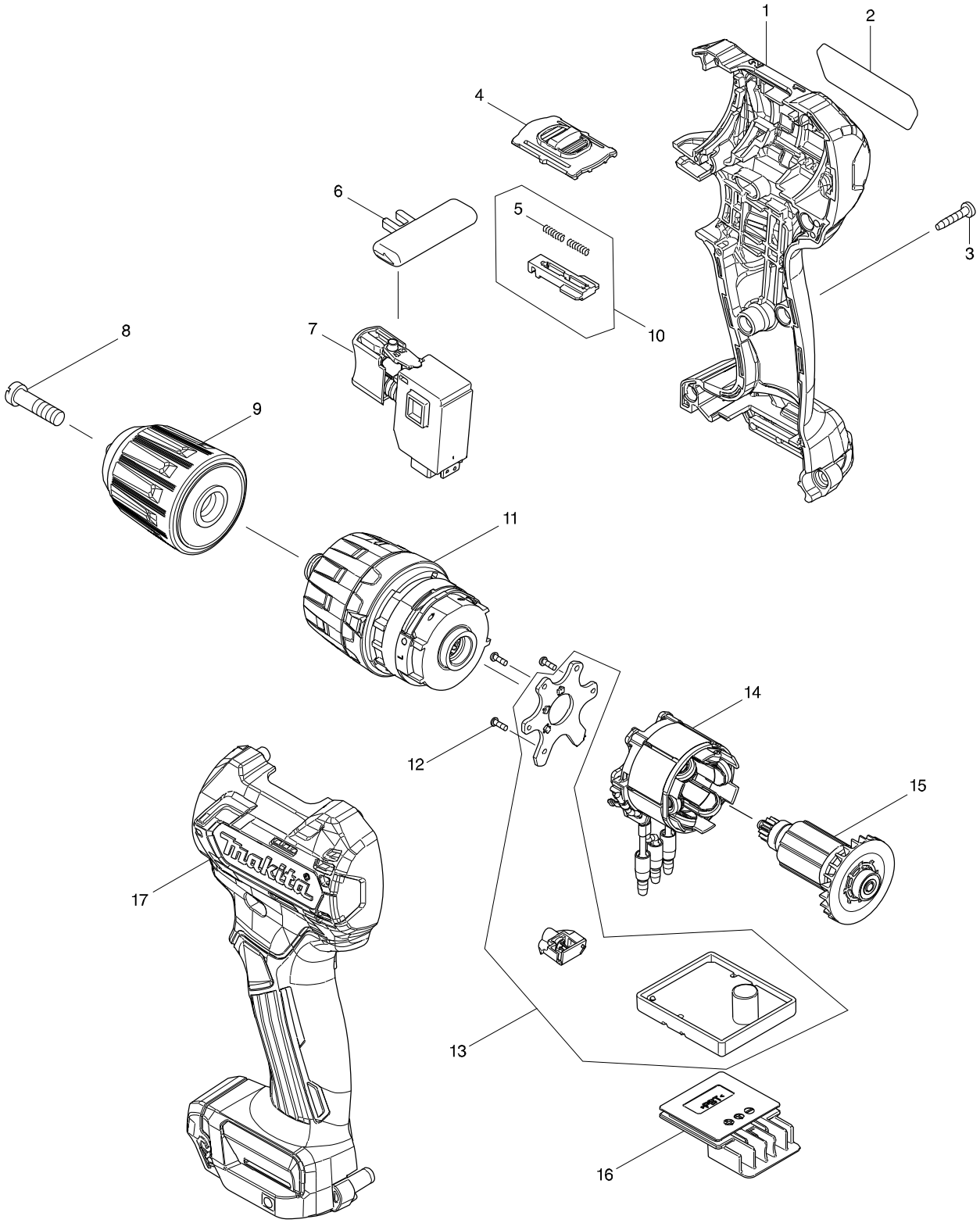

Modelo HP332D CORDLESS HAMMER DRIVER DRILL

Artículo	Código	Descripción	Interc	Cantida	N/O	Opción 1	Opción 2	Notas
001	183C34-7	HOUSING SET		1				
D10		INC. 17						
002	851T70-0	HP332D NAME PLATE		1				
003	266429-2	TAPPING SCREW 3X16		8				
004	456532-9	SPEED CHANGE LEVER		1				
005	233025-1	COMPRESSION SPRING 2		2				
006	419041-9	F/R CHANGE LEVER		1				
007	650689-0	SWITCH C3JW-2B		1				
008	251468-5	- FLAT HEAD SCREW M6X22		1				
009	763238-5	KEYLESS DRILL CHUCK 10		1				
010	123587-6	CHANGE LEVER ASS'Y		1				
D10		INC. 5						
011	123548-6	GEAR ASSEMBLY		1	*			
011-1	123761-6	GEAR ASSEMBLY	O	1	*			
011-2	123867-0	GEAR ASSEMBLY	O	1				
012	266490-9	TAPPING SCREW PT 2X6		3				
013	620487-6	CONTROLLER		1	*			
013-1	620487-6	CONTROLLER	O	1				
C10	620553-9	LED CIRCUIT		1				
014	629178-6	STATOR		1				
015	619393-0	ROTOR		1	*			
015-1	619410-6	ROTOR	O	1				
016	644813-5	TERMINAL		1				
017	183C34-7	HOUSING SET		1				
D10		INC. 1						
A01	251314-2	+ SCREW M4X12		1				
A02	346909-5	HOOK		1				
A03	784244-7	+ BIT 2-50		1				
A04B	456128-6	BATTERY COVER		1				
A04C	821549-5	CONNECTOR PLASTIC CASE (TYPE1)		1				
C10	453974-8	LATCH		4				
A05B	***DC10SA	DC10SA BATTERY CHARGER		1				
D10		COMPO-PARTS						
A05C	838312-9	INNER TRAY		1				
A06B	197394-3	BATTERY BL1020B SET		2				
A06C	809C60-5	HP332DZJ INDICATION LABEL		1				
A07B	821661-1	PLASTIC CARRYING CASE		1				
C10	417724-5	LATCH		2				
A07C	809C61-3	HP332DZJ PLASTIC CASE LABEL		2				