Modelo DFJ201 CORDLESS FAN JACKET

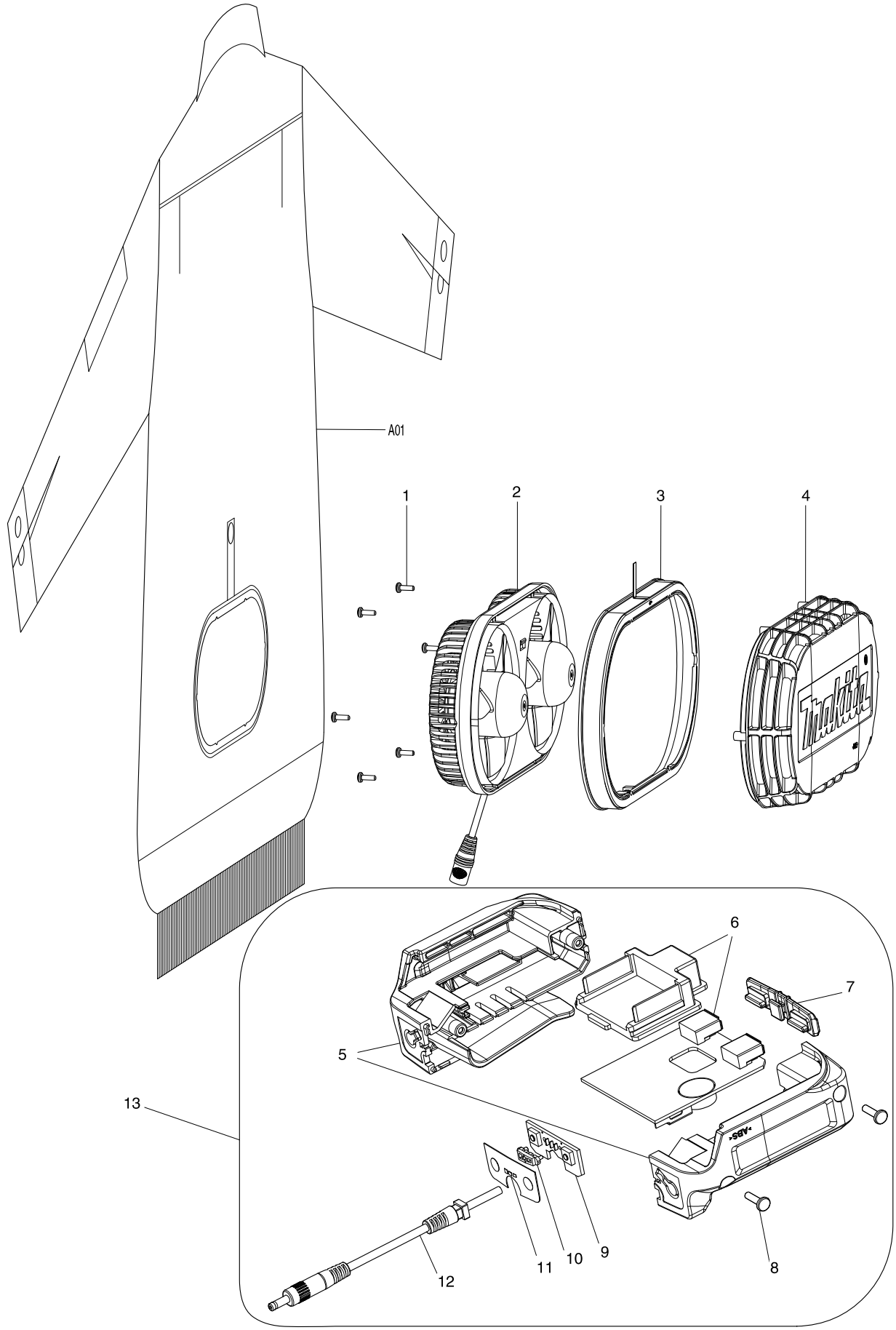

Modelo DFJ201 CORDLESS FAN JACKET

Artículo	Código	Descripción	Interc	Cantida	N/O	Opción 1	Opción 2	Notas
001	GM00001408	SCREW 2.6X8 PB		6				
002	GM00001442	FAN ASSEMBLY		1				
003	GM00001410	FAN BRACKET HOOD ASSEMBLY A		1				
004	GM00001411	FAN FRONT HOUSING		1				
005	GM00001399	BODY ASSEMBLY		1				
006	GM00001400	MAIN PCBA ASSEMBLY		1				
007	GM00001401	CLOSING PLUG		1				
008	GM00001402	SCREW 3X12		2				
009	GM00001403	SWITCH PCBA		1				
010	GM00001404	LED SUPPORT		1				
011	GM00001440	SWITCH LABEL		1				
012	GM00001439	POWER SUPPLY CORD		1				
013	GM00001441	BATTERY ADAPTER		1				
A01A	GM00001433	JACKET S B-TYPE		1	*			
A01B	GM00001434	JACKET M B-TYPE		1	*			
A01C	GM00001435	JACKET L B-TYPE		1	*			
A01D	GM00001436	JACKET XL B-TYPE		1	*			
A01E	GM00001437	JACKET 2XL B-TYPE		1	*			
A01F	GM00001438	JACKET 3XL B-TYPE		1	*			
A01-1A	GM00001480	JACKET S A-TYPE WITH CE TAG	X	1				
A01-1B	GM00001481	JACKET M A-TYPE WITH CE TAG	X	1				
A01-1C	GM00001482	JACKET L A-TYPE WITH CE TAG	X	1				
A01-1D	GM00001483	JACKET XL A-TYPE WITH CE TAG	X	1				
A01-1E	GM00001484	JACKET 2XL A-TYPE WITH CE TAG	X	1				
A01-1F	GM00001485	JACKET 3XL A-TYPE WITH CE TAG	X	1				